Comparator

Two-Bit Comparator

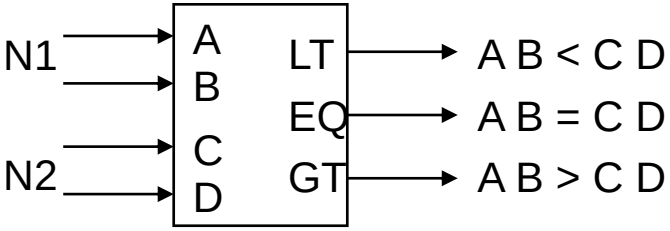

block diagram
and
truth table

A	B	C	D	LT	EQ	GT
0	0	0	0	0	1	0
		0	1	1	0	0
		1	0	1	0	0
		1	1	1	0	0
0	1	0	0	0	0	1
		0	1	0	1	0
		1	0	1	0	0
		1	1	1	0	0
1	0	0	0	0	0	1
		0	1	0	0	1
		1	0	0	1	0
		1	1	1	0	0
1	1	0	0	0	0	1
		0	1	0	0	1
		1	0	0	0	1
		1	1	0	1	0

we'll need a 4-variable Karnaugh map
for each of the 3 output functions

Two-Bit Comparator (cont'd)

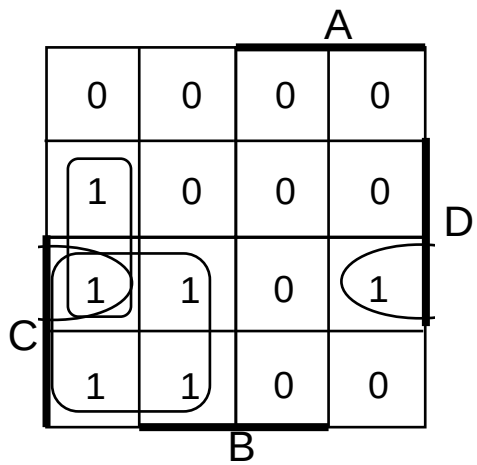

K-map for LT

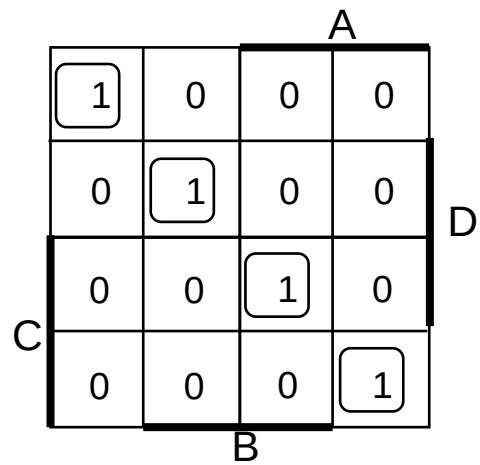

K-map for EQ

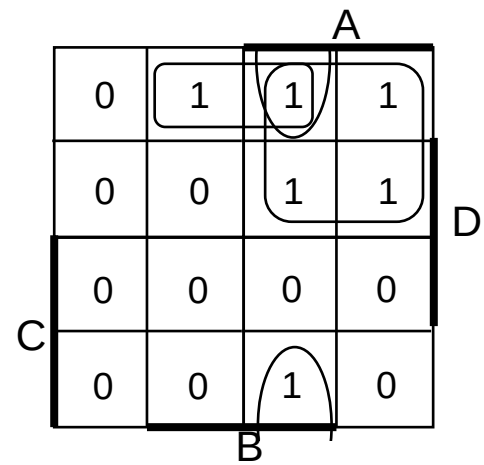

K-map for GT

LT = A' B' D + A' C + B' C D

EQ = A'B'C'D' + A'BC'D + ABCD + AB'CD' = (A xnor C) • (B xnor D)

GT = B C' D' + A C' + A B D'

Equality Comparator

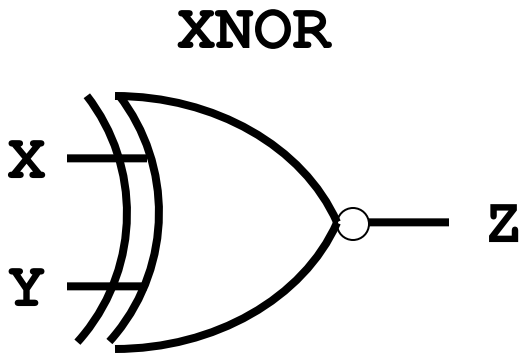

X	Y	Z
0	0	1
0	1	0
1	0	0
1	1	1

Z = X XNOR Y

4-bit Equality Detector

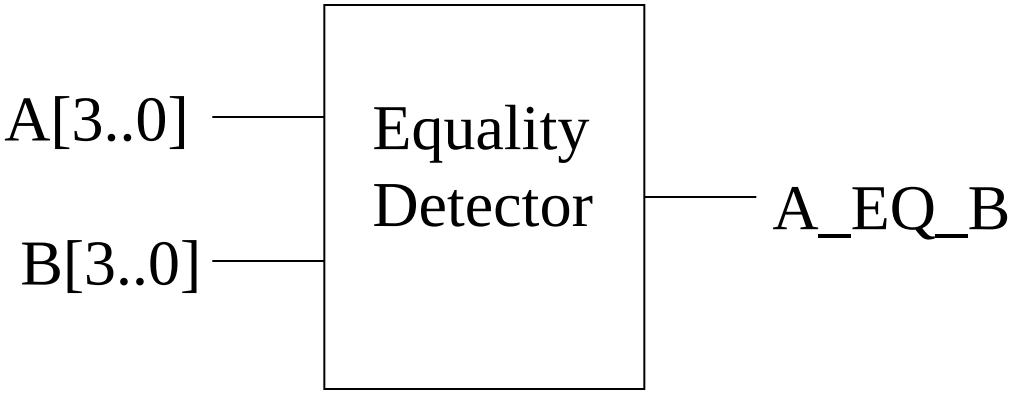

4-Bit Equality Comparator

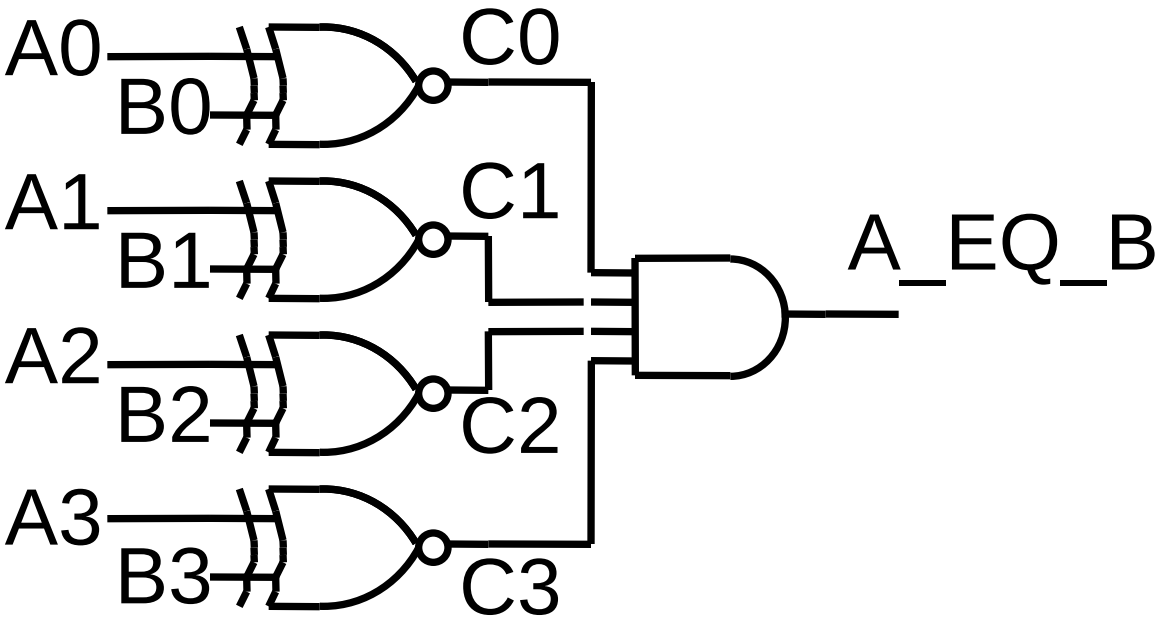

4-bit Magnitude Comparator

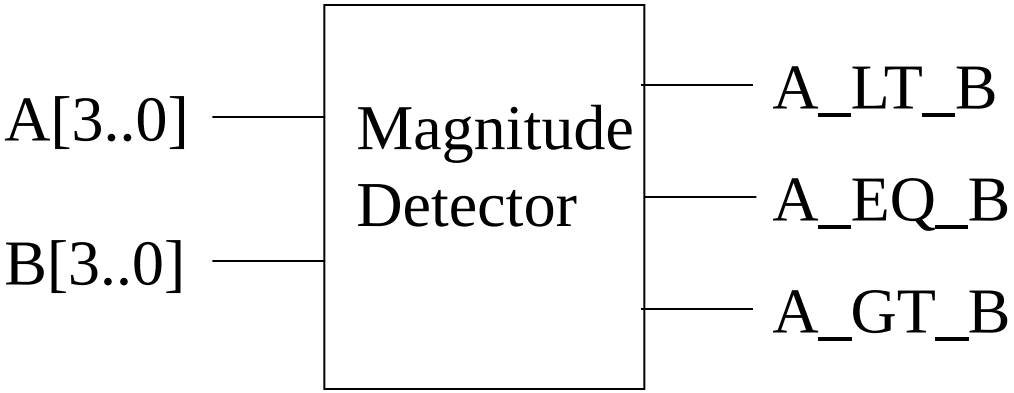

Magnitude Comparator

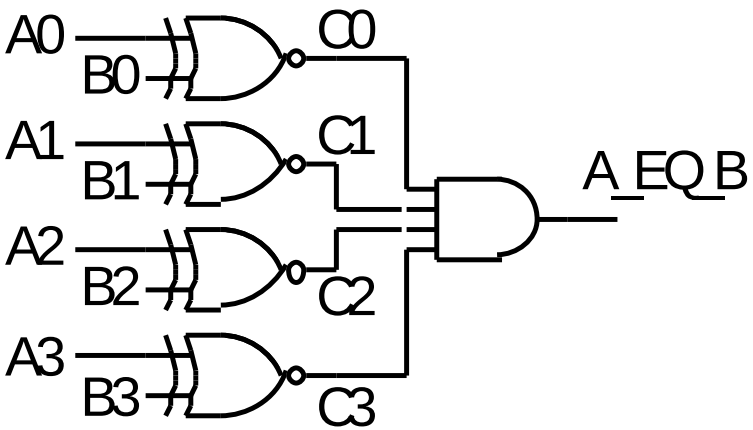

How can we find A_GT_B?

How many rows would a truth table have?

$2^8 = 256!$

Magnitude Comparator

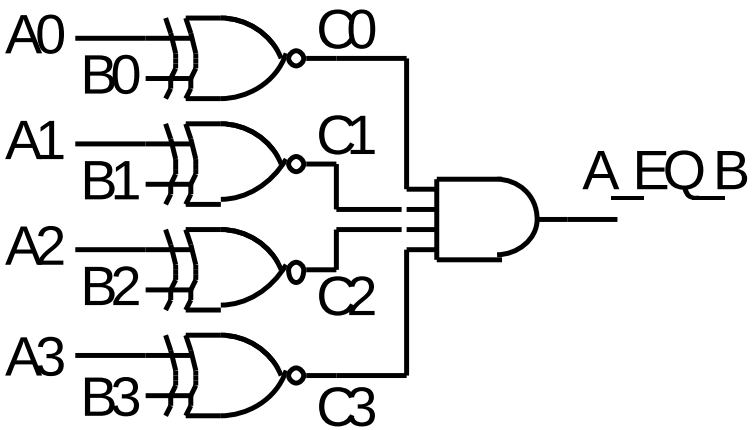

Find A_GT_B

Because A3 > B3
i.e. A3 . B3’ = 1

If A = 1001 and
B = 0111
is A > B?
Why?

Therefore, one term in the logic equation for A_GT_B is A3 . B3’

Magnitude Comparator

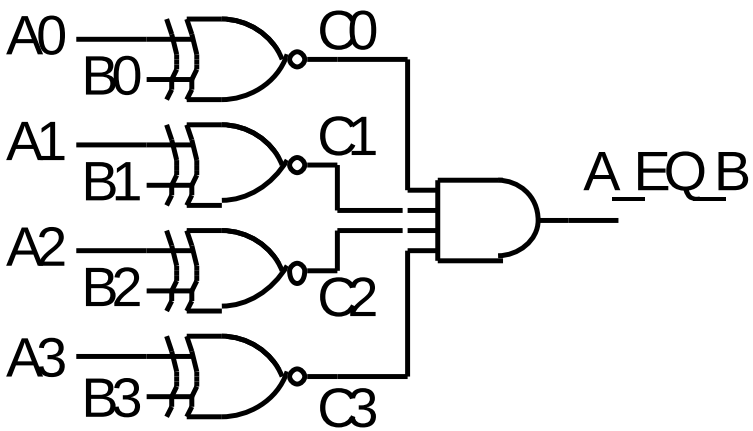

A_GT_B = A3 . B3’
+ …..

Because A3 = B3 and
A2 > B2
i.e. C3 = 1 and
A2 . B2’ = 1

Therefore, the next term in the logic equation for A_GT_B is C3 . A2 . B2’

If A = 1101 and
B = 1011
is A > B?
Why?

Magnitude Comparator

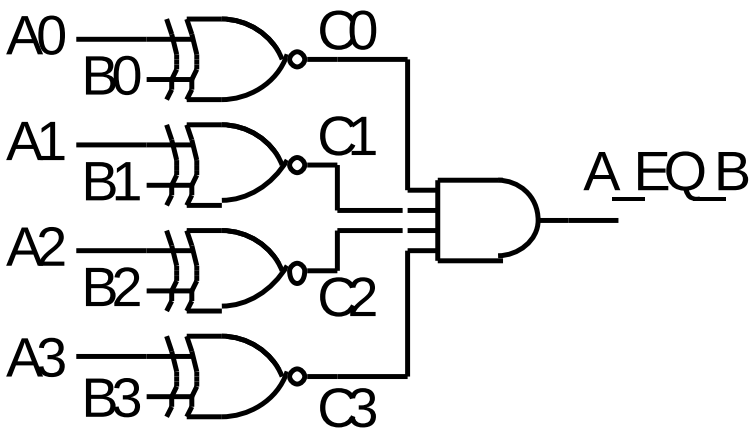

A_GT_B = A3 . B3'
+ C3 . A2 . B2'
+ …..

Because A3 = B3 and
A2 = B2 and
A1 > B1
i.e. C3 = 1 and C2 = 1 and
A1 . B1' = 1

If A = 1010 and
B = 1001
is A > B?
Why?

Therefore, the next term in the logic equation for A_GT_B is C3 . C2 . A1 . B1'

Magnitude Comparator

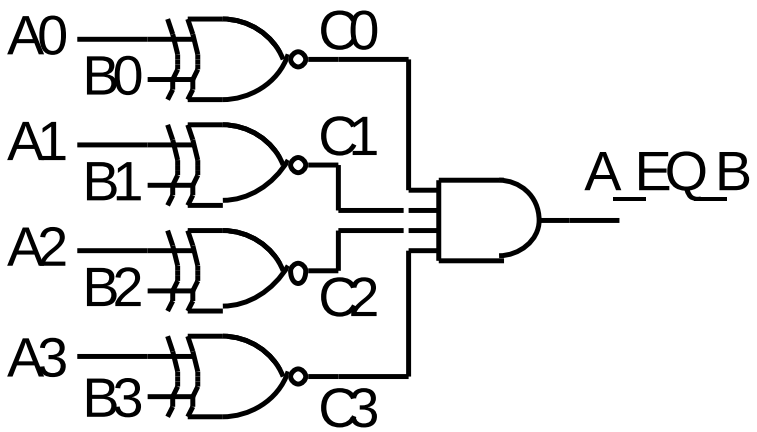

If A = 1011 and
B = 1010
is A > B?
Why?

A_GT_B = A3 . B3’
+ C3 . A2 . B2’
+ C3 . C2 . A1 . B1’
+ …..

Because A3 = B3 and
A2 = B2 and
A1 = B1 and
A0 > B0
i.e. C3 = 1 and C2 = 1 and
C1 = 1 and A0 . B0’ = 1

Therefore, the last term in the logic equation for A_GT_B is C3 . C2 . C1 . A0 . B0’

Magnitude Comparator

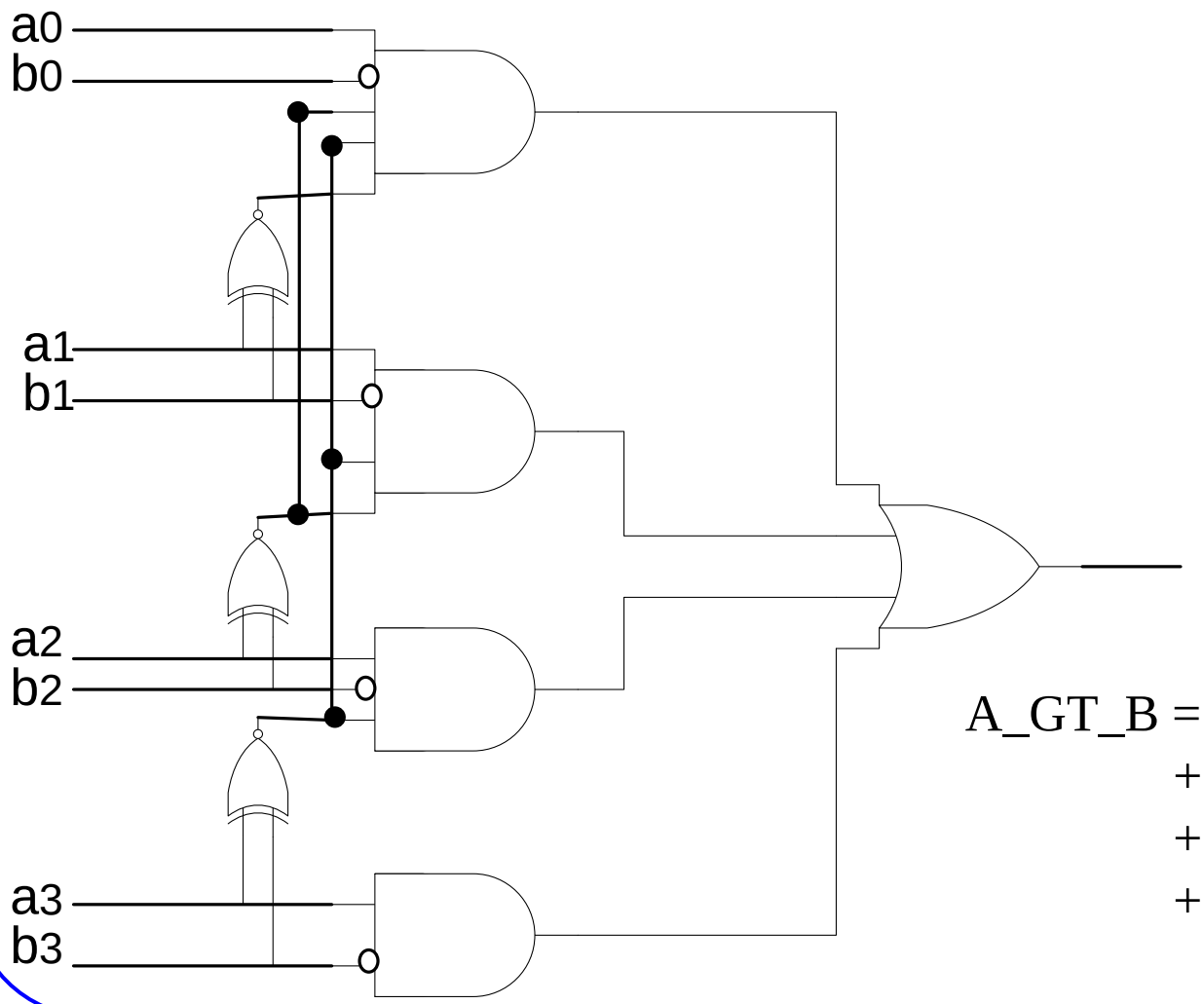

A_GT_B = A3 . B3’
+ C3 . A2 . B2’
+ C3 . C2 . A1 . B1’
+ C3 . C2 . C1 . A0 . B0’

Magnitude Comparator

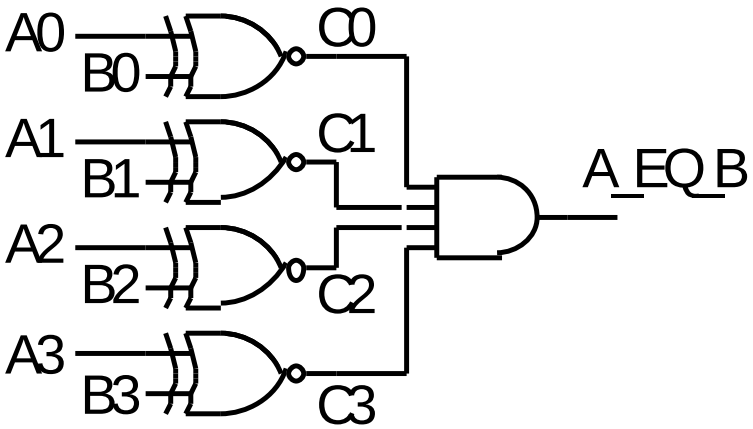

Find A_LT_B

A_LT_B = A3’ . B3
+ C3 . A2’ . B2
+ C3 . C2 . A1’ . B1
+ C3 . C2 . C1 . A0’ . B0

TTL 74x85

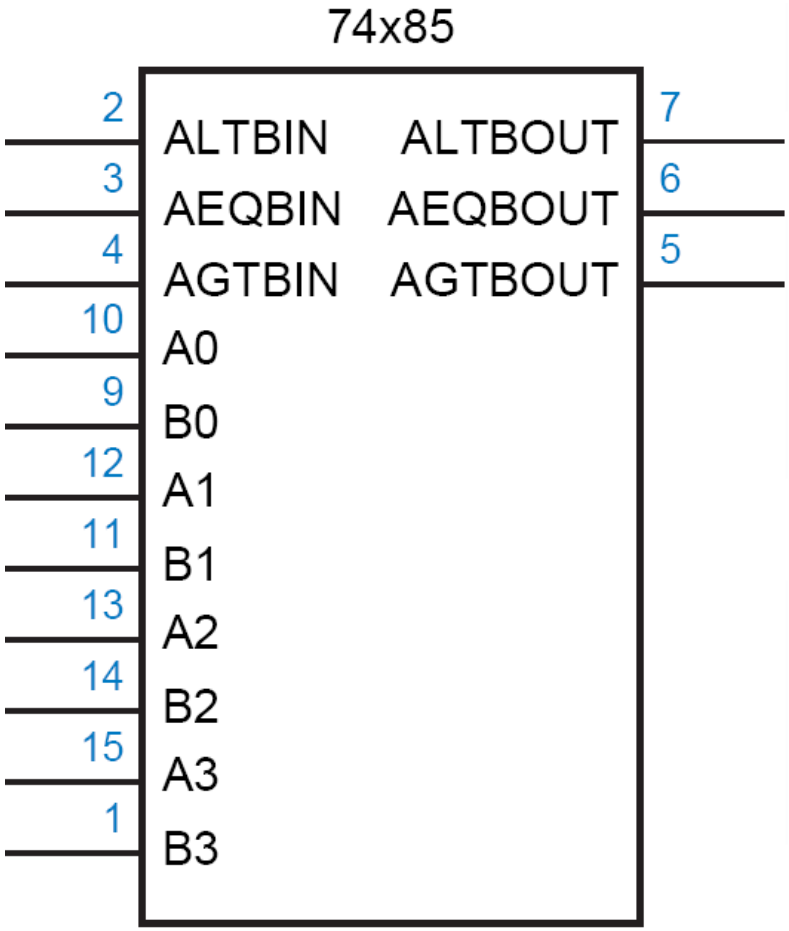
74x85
2
3
4
10
9
12
11
13
14
15
1
ALTBIN
AEQBIN
AGTBIN
A0
B0
A1
B1
A2
B2
A3
B3
ALTBOUT
AEQBOUT
AGTBOUT
7
6
5

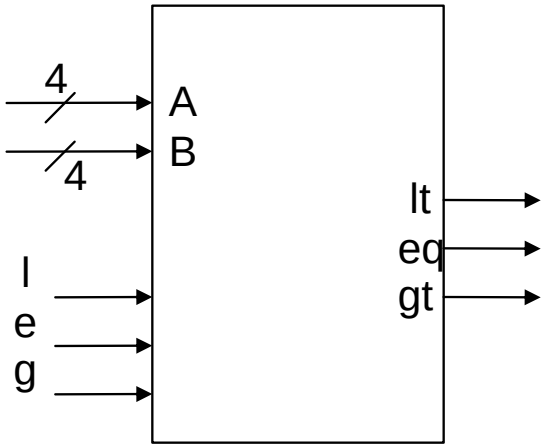
4
4
A
B
I
e
g
lt
eq
gt

TTL 74x85

- ***if (A>B) lt=0, eq=0, gt=1***
- ***if (A<B) lt=1, eq=0, gt=0***
- ***if (A=B) lt=l, eq=e, gt=g***

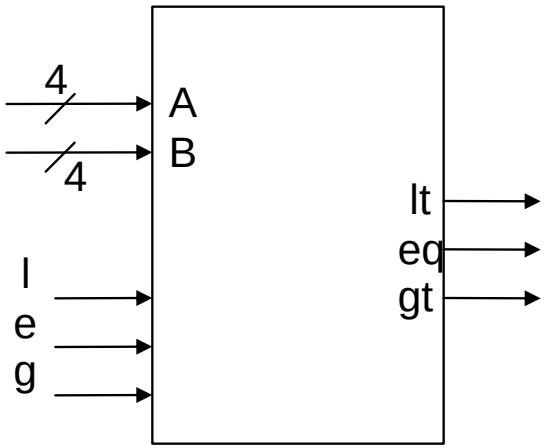

- The three l, e and g inputs are used when cascading.

Comparator (continued…)

- Let us now cascade four of the 74x85 to construct a 16 bit comparator.

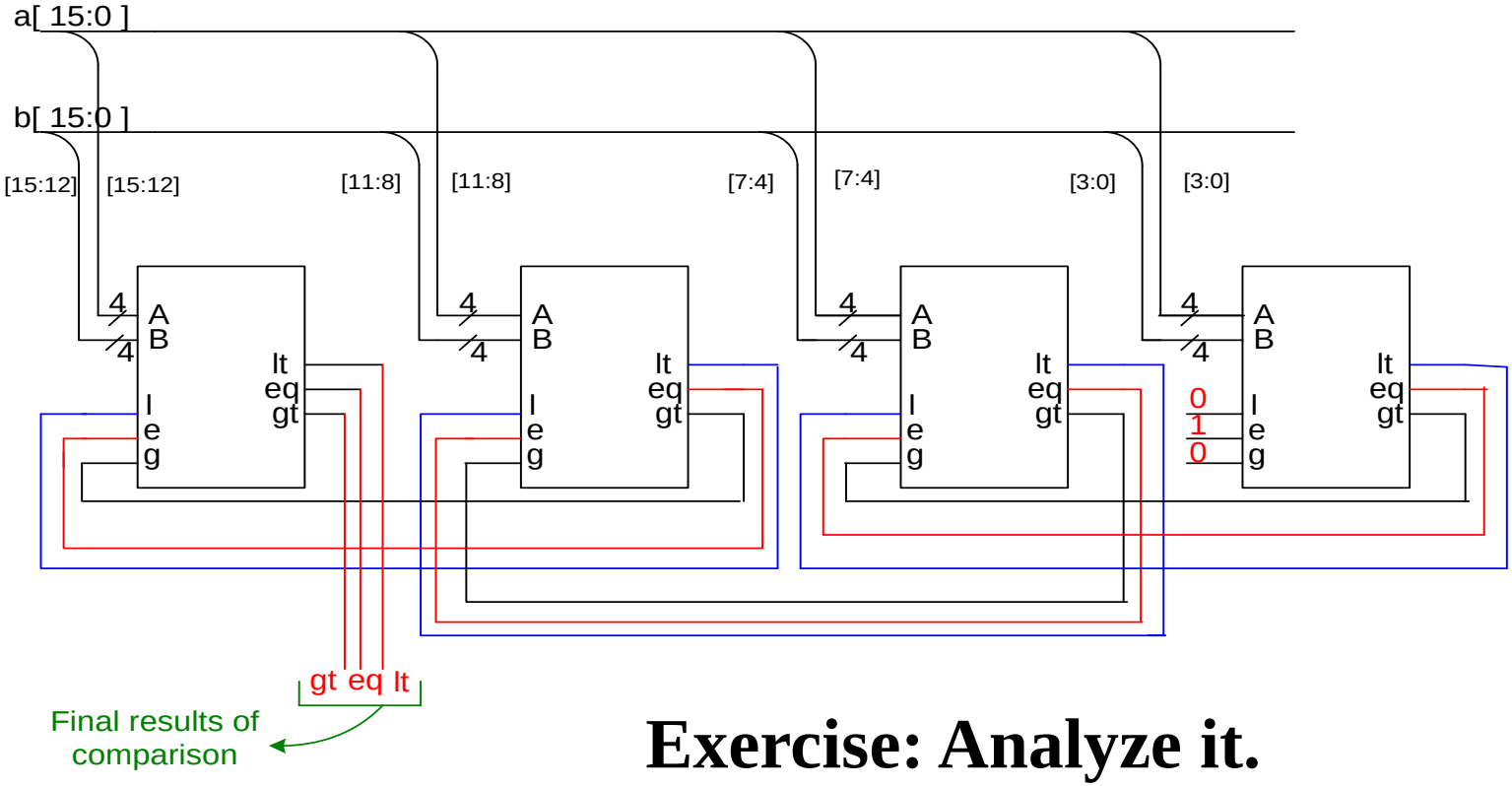

Exercise: Analyze it.

TTL 74x682

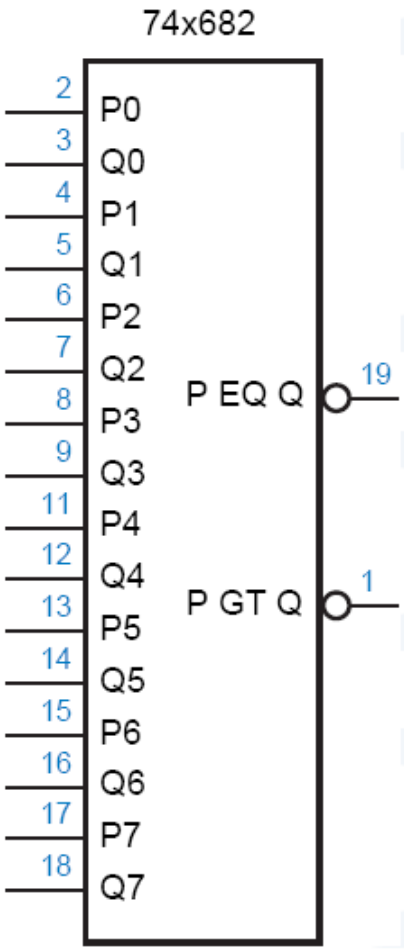

- 8-bit Comparator
  - Arithmetic conditions derived from 74x682 outputs?
  - And their circuits?

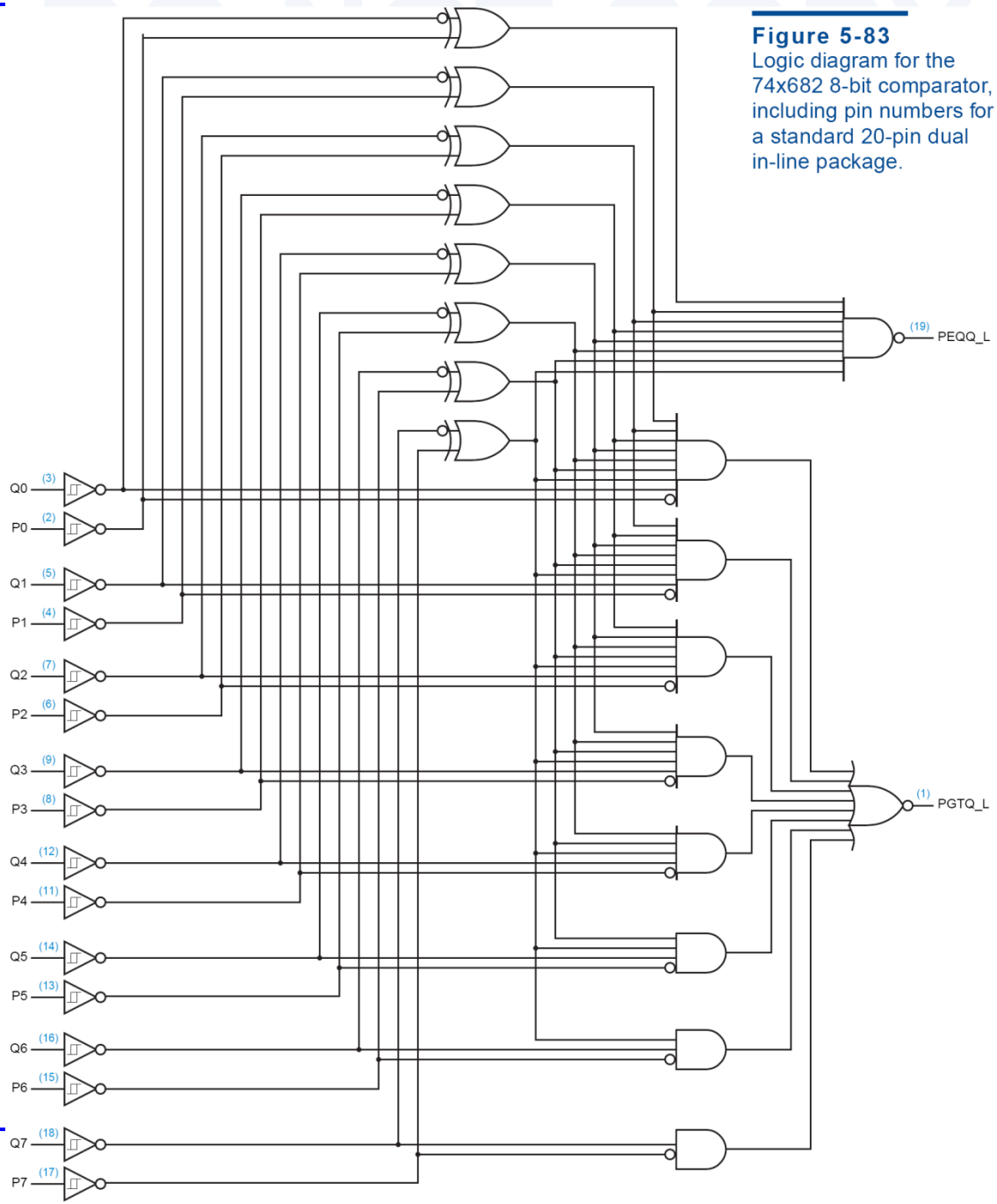

Figure 5-83
Logic diagram for the 74x682 8-bit comparator, including pin numbers for a standard 20-pin dual in-line package.

Maximum Finder
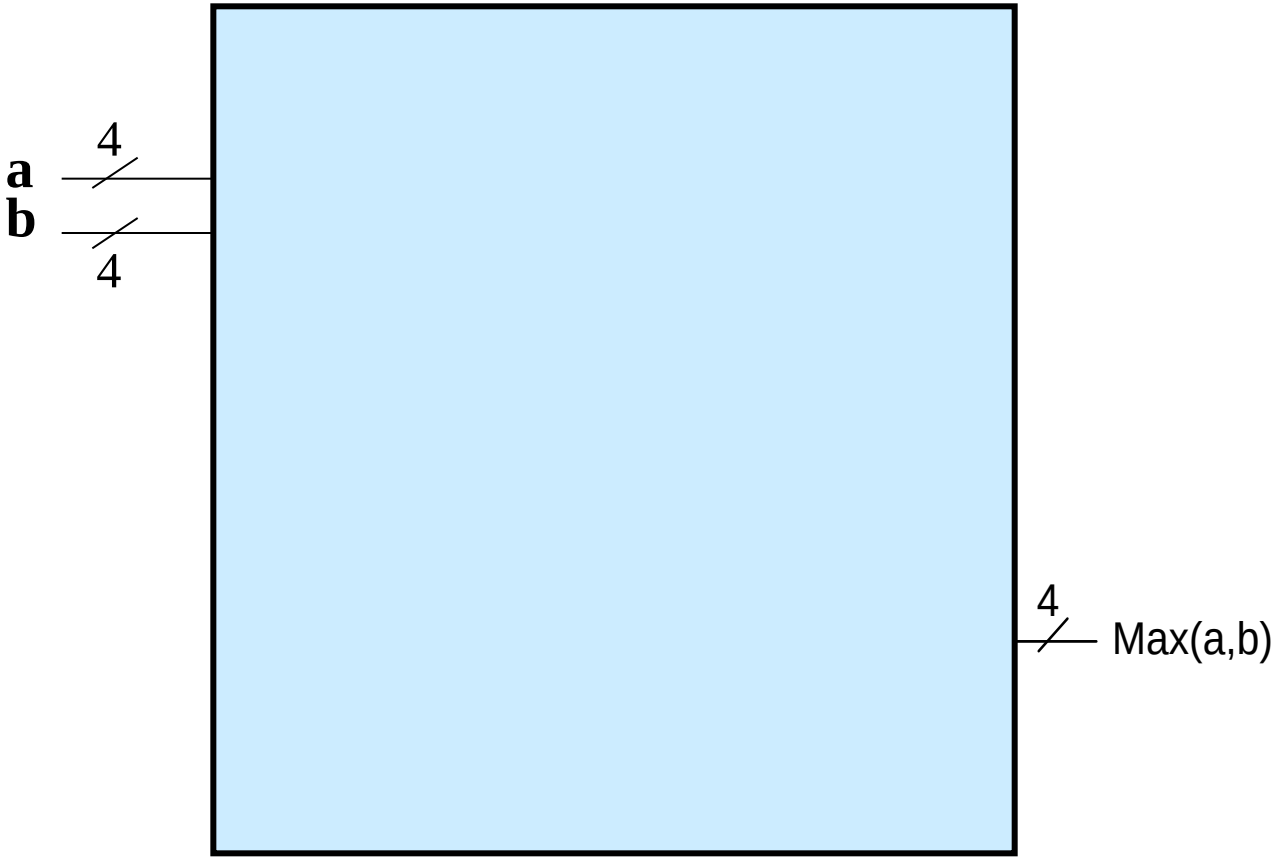
- **Design a maximum finder**